LE VITA

Ref #29691, 29696

Category: Indoor
Subcategory: Suspended

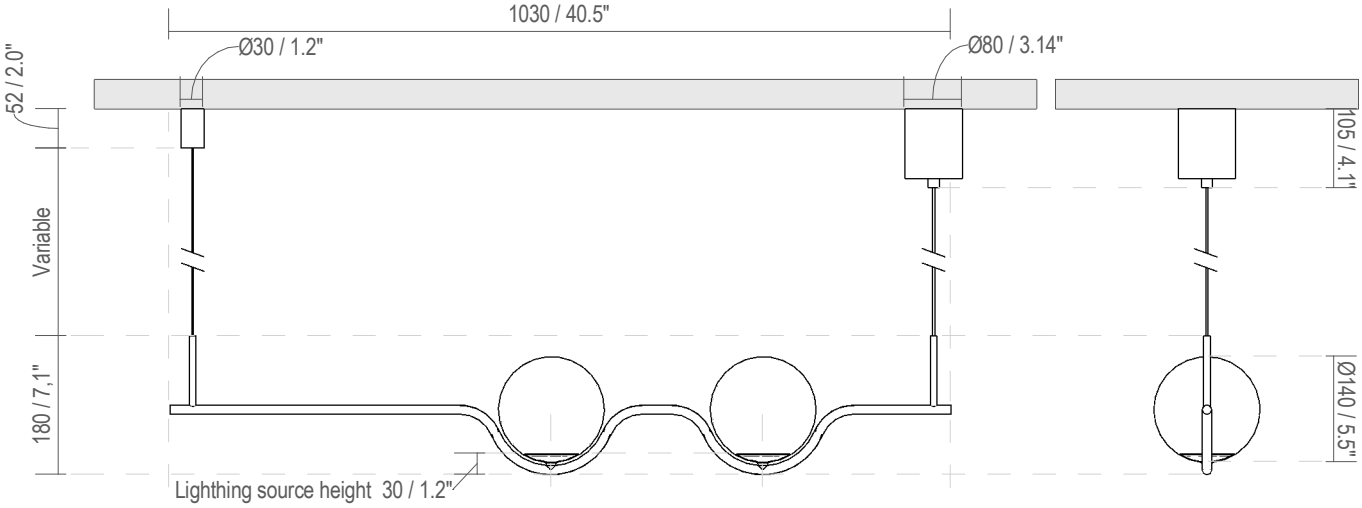

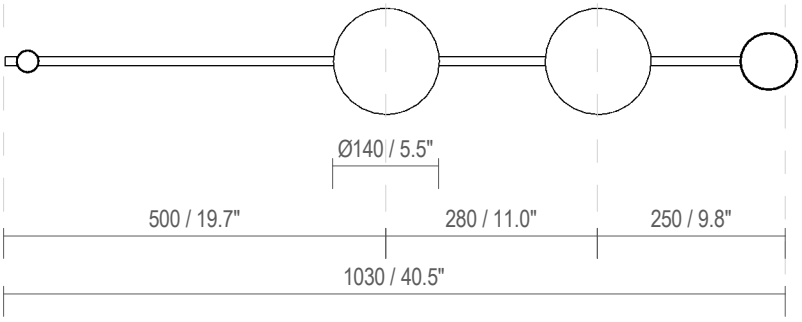

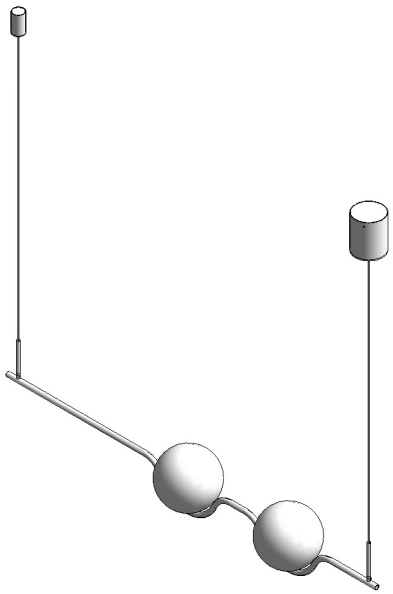

Fixing dimentions

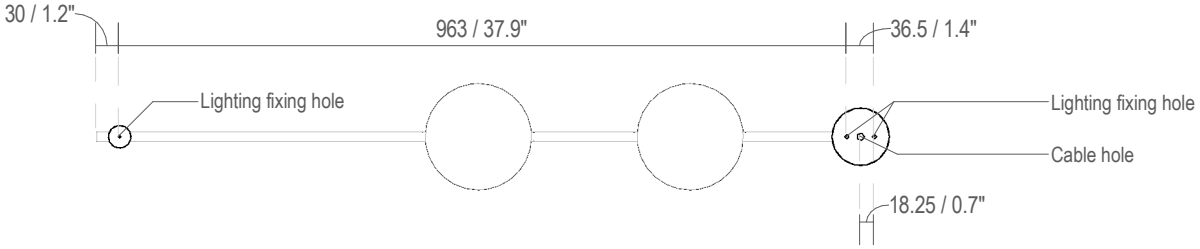

Units: mm / Inch
Actualization Date 20/04/2020