PALS

Ref #70290, 70291

Category: Outdoor
Subcategory: Surface

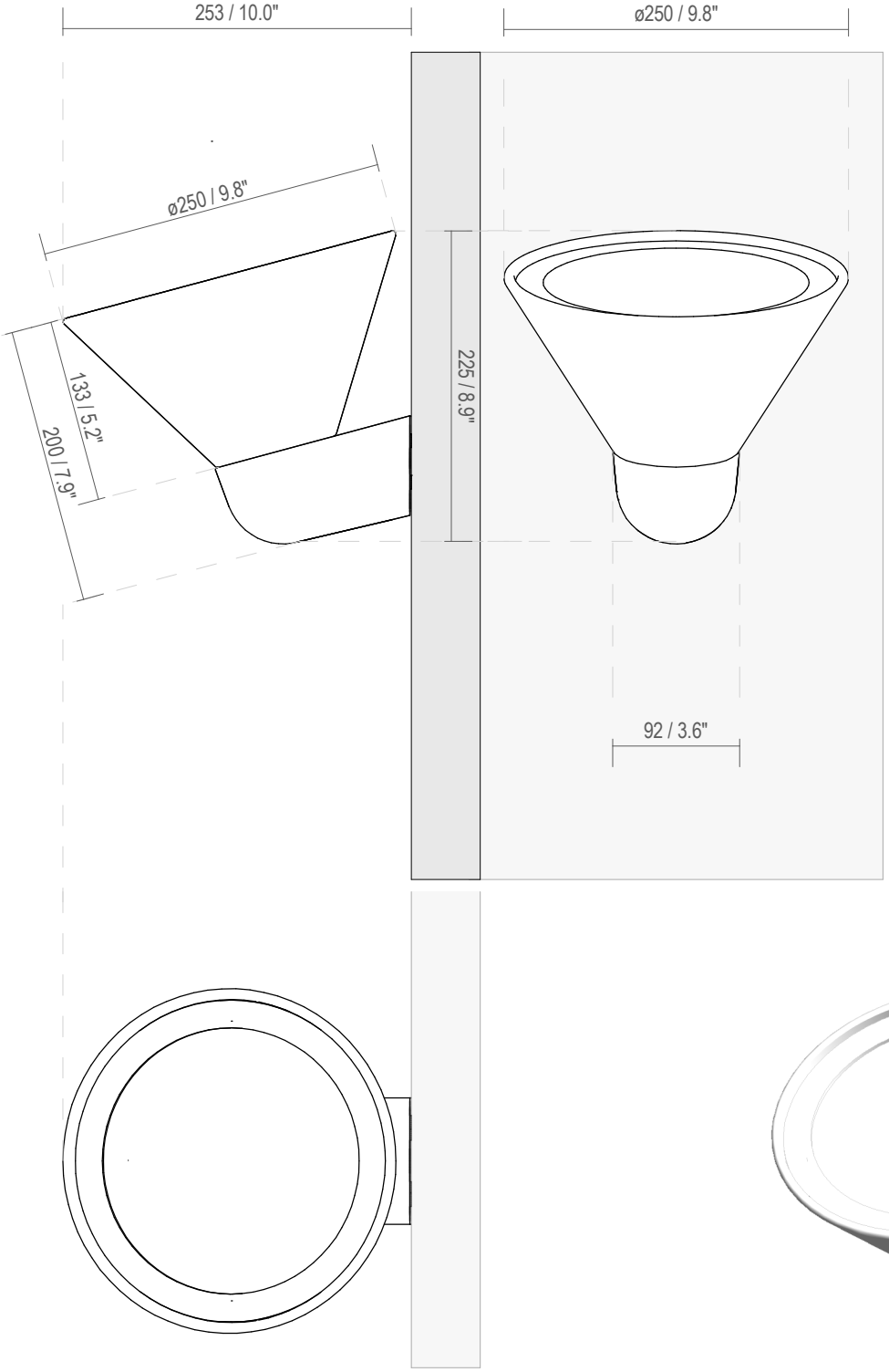

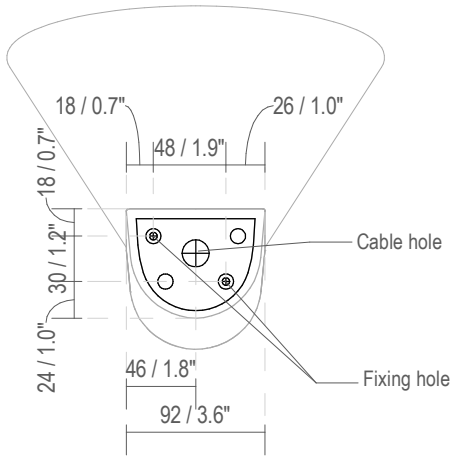

Fixing Dimensions

Units: mm / Inch

Actualization Date 27/08/2020