Minima Pro Square Fixed IP65

astro

Product Overview

Location:	Interior
Class:	CE (Class III)
Ip Rating:	IP65
Bathroom Zone:	Zone 1, 2, 3
Driver Required:	Constant Current 300mA Max
Installation Orientation:	Ceiling Mount Plaster Board Installation Only. Not Suitable For Mounting In A Solid Ceiling. Retrofit
Main Material:	Metal - Mild Steel
Dimensions (mm):	H: 100 W: 100 D: 100
Cut Out Hole (mm/inches):	-
Recess Depth (mm):	150
Light Source:	COB LED
Wattage:	10.3W
Tilt Adjustable Angle (°):	-
Dimmable:	Yes (Control Gear Dependent)
Fire Rating:	30 min & 90 min Solid Joist; 30 min Metal Web / I-Joist EN1365-2
F Mark:	Not Suitable For Covering With Thermal Insulation
Gross Weight (kg):	Configuration Dependant

Configuration Options:

Finish:	Matt Black / Matt White
Beam:	Narrow / Medium / Wide
Colour Temp (K):	2700 / 3000
CRI (typ):	Edge 90+ / Essence 95+ (98typ.)
Dimming Method:	DALI / Phase
Installed filter:	Linear / Honeycomb / Diffuser

*** Photometric information will vary depending on the specific configuration.**
Please see website for more details

Finish: Matt Black

Finish: Matt White

To maintain this product to its best condition, please view our care and cleaning guide on the support section of the astro website.

Pour entretenir au mieux ce produit, veuillez consulter notre guide d'entretien et de nettoyage, dans la rubrique d'aide sur le site Web d'Astro.

Um dieses Produkt im besten Zustand zu erhalten, beachten Sie bitte unseren Leitfaden zu Pflege und Reinigung im Abschnitt „Support" auf der Astro-Website.

Per mantenere questo prodotto nelle sue migliori condizioni, consultare la nostra guida per la manutenzione e la pulizia nella sezione dedicata all'assistenza del sito Web Astro.

Performance

astro

	Edge (High Efficacy)						Essence (High Quality)		
	2700K			3000K			2700K		
Beam	Narrow	Medium	Wide	Narrow	Medium	Wide	Narrow	Medium	Wide
Beam Angle	21	31	46	22	31	46	22	31	46
Light Source Lumens (lm)	1834			1872			1127		
Light Source Rating (W)	10.3			10.3			10.2		
Light Source lm/W	178			182			110		
Luminaire Lumens (lm)	1149	1124	1218	1211	1273	1297	798	857	869
Luminaire Rating (W)	11.7			11.8			11.7		
Luminaire lm/W	97	96	104	102	108	110	68	73	74
Luminaire Intensity (Cd)	6005	3866	2142	6250	4281	2274	4265	2949	1564

Forward Voltage (Vf)	34.5	34.5	34
Max. Drive Current (mA)	300	300	300
Total Circuit Watts (typ.)	11.7	11.8	11.7

Binning	2-Step SDCM	2-Step SDCM	2-Step SDCM
CRI (typ.)	90+	90+	95+ (98typ.)
TM30-15 (Rf/Rg)	93.3/100.6	93.1/100.0	97/102
Lightsource Lifetime (hrs)	L90B10 150,000 (calculated)	L90B10 150,000 (calculated)	L90B10 125,000 (calculated)
Lifetime inc. Driver (hrs)	L90 B10 50,000hrs+*	L90 B10 50,000hrs+*	L90 B10 50,000hrs+*

Dimming Options	DALI/Phase	DALI/Phase	DALI/Phase
Dimming Range	1-100%/5-100%/1-100%	1-100%/5-100%/1-100%	1-100%/5-100%/1-100%
Max Distance Driver LED (M)	2	2	2
Emergency	Emergency pack available as accessory	Emergency pack available as accessory	Emergency pack available as accessory

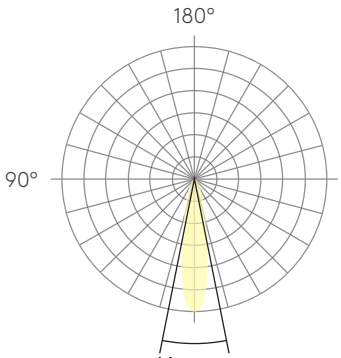

Narrow 21°

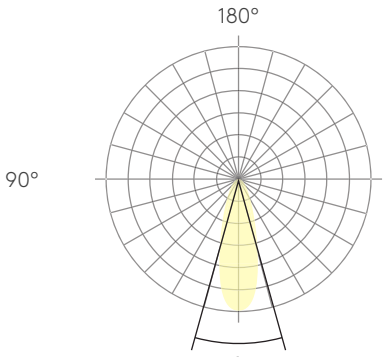

Medium 31°

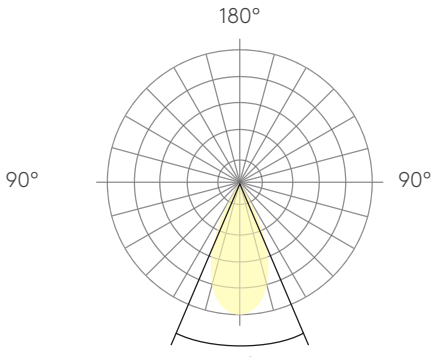

Wide 46°

*at 60°C running temp.

Product Elevations

astro

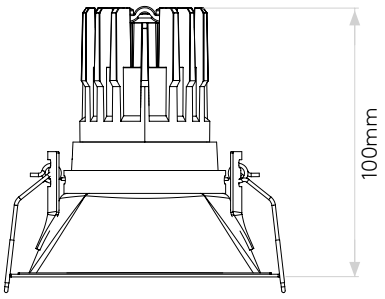

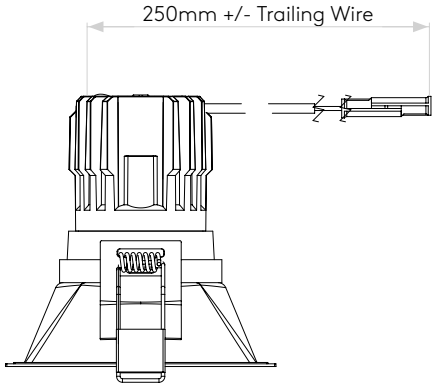

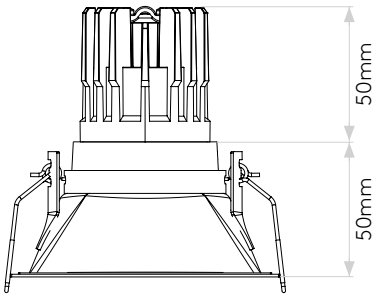

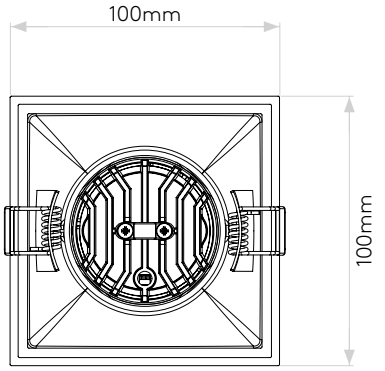

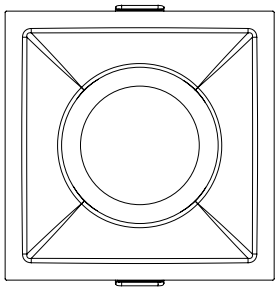

Please note that some dimensions may vary slightly due to manufacturing tolerances, this includes cable entry and fixing holes

Veuillez noter que certaines dimensions peuvent varier légèrement en raison des tolérances de fabrication, y compris l'entrée de câble et les trous de fixation.

Bitte beachten Sie, dass die Maße Fertigungstoleranzen unterliegen und daher in geringem Umfang von der angegebenen Größe abweichen können. Dies gilt auch für Kabeleingänge und Befestigungslöcher.

Si prega notare che possono esserci piccole variazioni in alcune dimensioni dovute alle tolleranze di produzione, queste includono l'ingresso del cavo e i fori di fissaggio.