LED Electrical Specification for **LSC3WxxxLR-Z UNI**

Constant current LED Driver

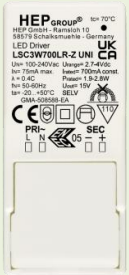

Approval Marks

GMA-508588-EA

	Item	Value	Remark
Input	Nominal voltage	100-240V	
	Nominal frequency	50–60Hz	
	AC voltage range	90-264V	
	DC voltage range (start)	NA	
	DC voltage range (operation)	NA	
	Nominal current		Full load @100/230VAC
	LSC3W200LR-Z UNI	85 / 50mA	
	LSC3W350LR-Z UNI	85 / 50mA	
	LSC3W500LR-Z UNI	85 / 50mA	
	LSC3W700LR-Z UNI	75 / 45mA	
	Total Harmonic Distortion (THD)	NA	
	Power factor	0.4C	Full load @100/230VAC
	Displacement factor	NA	
	Efficiency		Full load @100/230VAC
	LSC3W200LR-Z UNI	74% (Typ.)	
	LSC3W350LR-Z UNI	72% (Typ.)	
	LSC3W500LR-Z UNI	71% (Typ.)	
	LSC3W700LR-Z UNI	69% (Typ.)	
	No-load power	NA	
	Stand-by power	NA	
	Protection class	II	Suitable for class II luminaires
	Inrush current	13 A / 300 µs	
	Max.units per circuit breaker	Type B , 10A MCB: 21	
		Type B , 16A MCB: 33	
		Type C , 10A MCB: 35	
		Type C , 16A MCB: 55	
	Earth leakage current	NA	
Output	Nominal voltage range		
	LSC3W200LR-Z UNI	13-18Vdc	
	LSC3W350LR-Z UNI	2.7-10Vdc	
	LSC3W500LR-Z UNI	2.7-7Vdc	
	LSC3W700LR-Z UNI	2.7-4Vdc	

©HEP,LC-22-11-01

	Item	Value	Remark
Output	Maximum voltage		
	LSC3W200LR-Z UNI	28Vdc	
	LSC3W350LR-Z UNI	17Vdc	
	LSC3W500/700LR-Z UNI	15Vdc	
	Nominal current range		Full load @100/230VAC
	LSC3W200LR-Z UNI	200mA	
	LSC3W350LR-Z UNI	350mA	
	LSC3W500LR-Z UNI	500mA	
	LSC3W700LR-Z UNI	700mA	
	Current accuracy		Full load @100/230VAC
	LSC3W200LR-Z UNI	± 7%	
	LSC3W350/500/700LR-Z UNI	±5%	
	Typical output LF current ripple	± 5%	Low Frequency<120Hz Full load @ 230VAC
	Starting time	< 0.5 S	Full load @100/230VAC
	SVM	≦0.4	Full load @230VAC
	$P_{st}LM$	≦1	Full load @230VAC
	Nominal power range		
	LSC3W200LR-Z UNI	2.6-3.6W	
	LSC3W350LR-Z UNI	1-3.5W	
	LSC3W500LR-Z UNI	1.4-3.5W	
	LSC3W700LR-Z UNI	1.9-2.8W	
	Maximum power	3.6W	
Dimming	Dimming control	NA	
	Dimming range	NA	
	Lowest dimming current	NA	
	Dimming technique	NA	
	PWM frequency	NA	
	Galvanic isolation	NA	
Environment	Ambient temperature range t_a	-20°C - +50°C	
	Maximum case temperature t_c	70°C	
	Max. case temp. in fault condition	110°C	When operating under fault conditions, the temperature of the enclosure at any location should not exceed 110 °C
	Storage temperature range	-40°C - +85°C	
	Relative humidity	10% - 95%	
	Surge transient protection	1 kV	L/N
	Environmental rating	Indoor	
	IP rating	IP20	
	Mains switching cycles	> 100,000	
	Expected lifetime	> 50,000 h, tc 70 °C @ ta 50 °C > 100000 h, tc 60 °C @ ta 40 °C	0.2 % / 1,000 h failure rate 0.1 % / 1,000 h failure rate
Packing	Gross weight/box	15.1 kg	
	Net weight/box	13.8 kg	
	Pcs/box	512 PCS	
	Dimension/box	490(L)*270(W)*225(H)mm	
Protections			
Short-circuit Protection		Auto recovery	
Open-circuit Protection		Auto recovery	
Overload Protection		Auto recovery	

Conformity & Standards	
Safety standard:	EN 61347-1, EN 61347-2-13, EN 62493
Performance:	EN 62384
EMC standard:	EN 55015, EN 61000-3-2, EN 61000-3-3, EN 61547

Cable information	
PRI	
Cable cross-section	0.75-1.5□/AWG 18-16
Stripping	6mm
Pull test cable type	H03VV(H2)-F 2x0,75 mm²,H05VV(H2)-F 2x0,75-1,0 mm²
SEC	
Cable cross-section	0.5-1.5□/AWG 20-16
Stripping	6mm

Terminal information
PRI-Screw type(Blue)
SEC-Screw type(Green)

* If not mentioned, all the test conditions are based on full load at 100/230VAC input (for 100-240 VAC input).

Subject to change without notice, HEP guarantees all products perform functionally well

Electrical Values

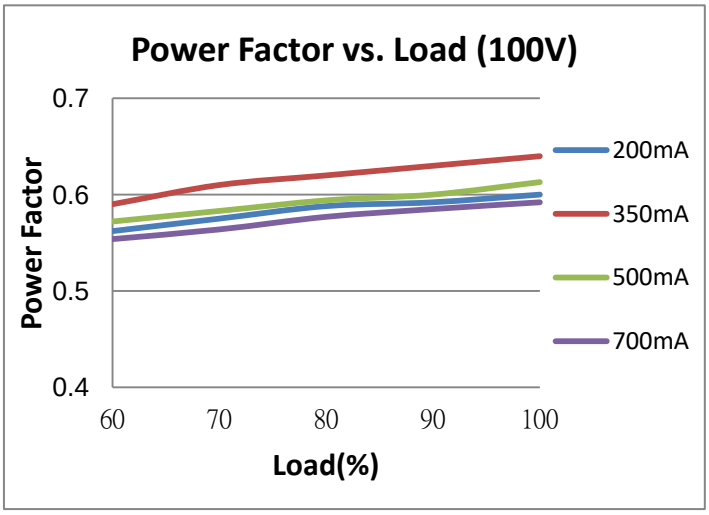

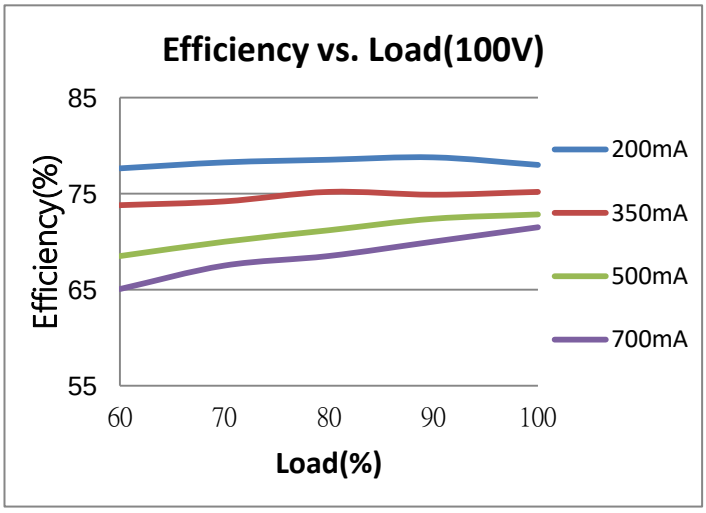

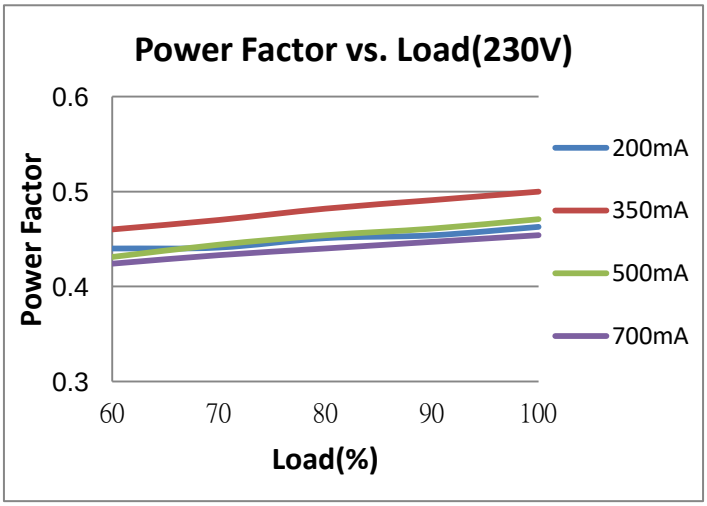

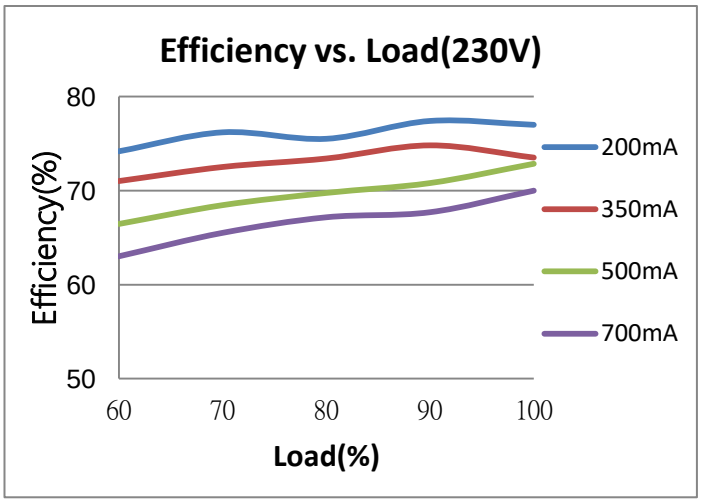

Physical

Parameter

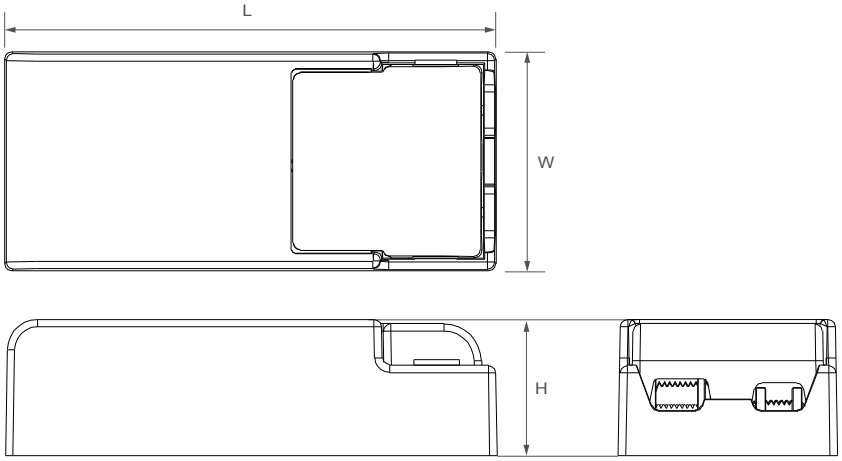

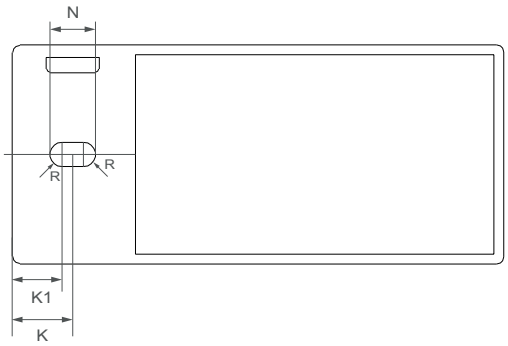

L	:	65	mm	W :	29	mm	H :	18 mm
R	:	1.6	mm	K :	8	mm	K1 :	6.7 mm
N	:	6	mm					

Slot On One Side Allowing Alignment : M+/-3 mm

Tolerance : +/-1 mm , R : +/-0.5 mm

Housing Material : Polycarbonate

Soldering : Lead - Free, Comply With RoHS

Label : Surface Print
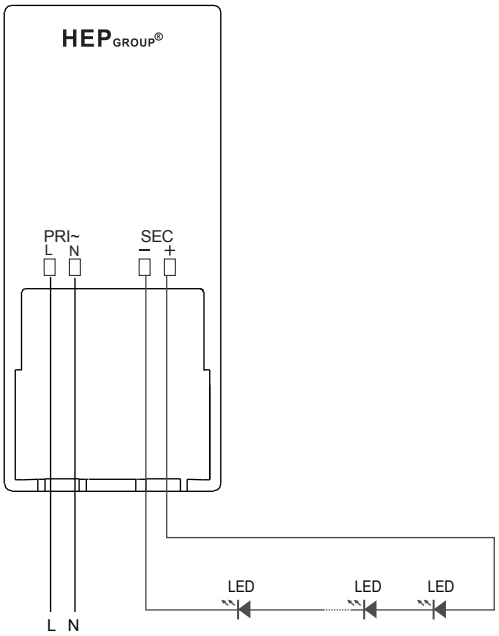
Wiring Diagram