NOVO

Ref #62716, 62717, 62718

Category: Indoor
Subcategory: Surface

Fixing Dimensions

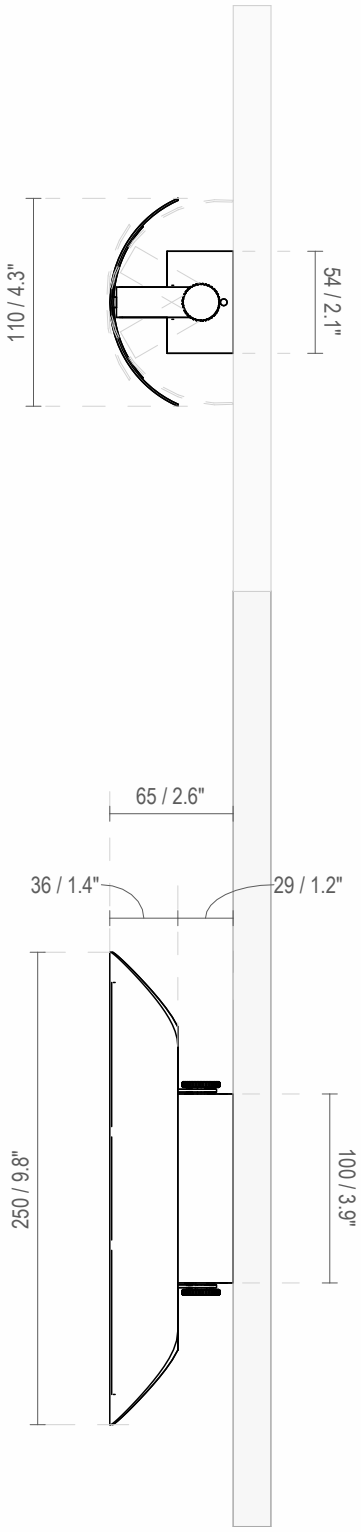

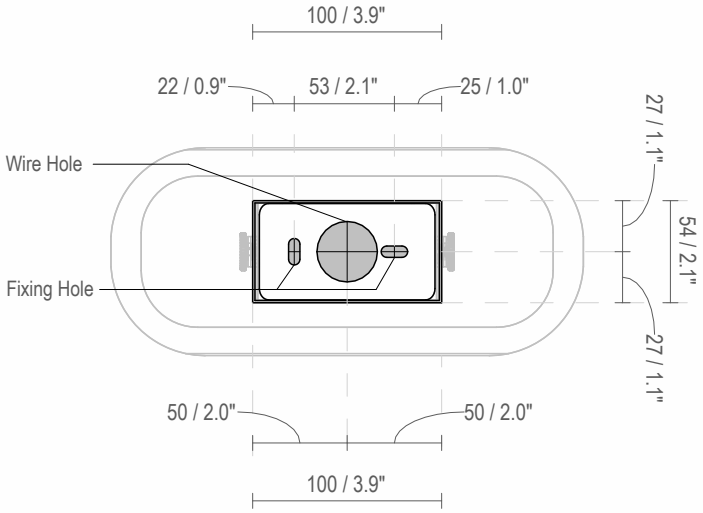

Units: mm / Inch
Actualization Date 14/10/2024

NOVO 500

Ref #62724, 62725, 62726

Category: Indoor
Subcategory: Surface

Fixing Dimensions

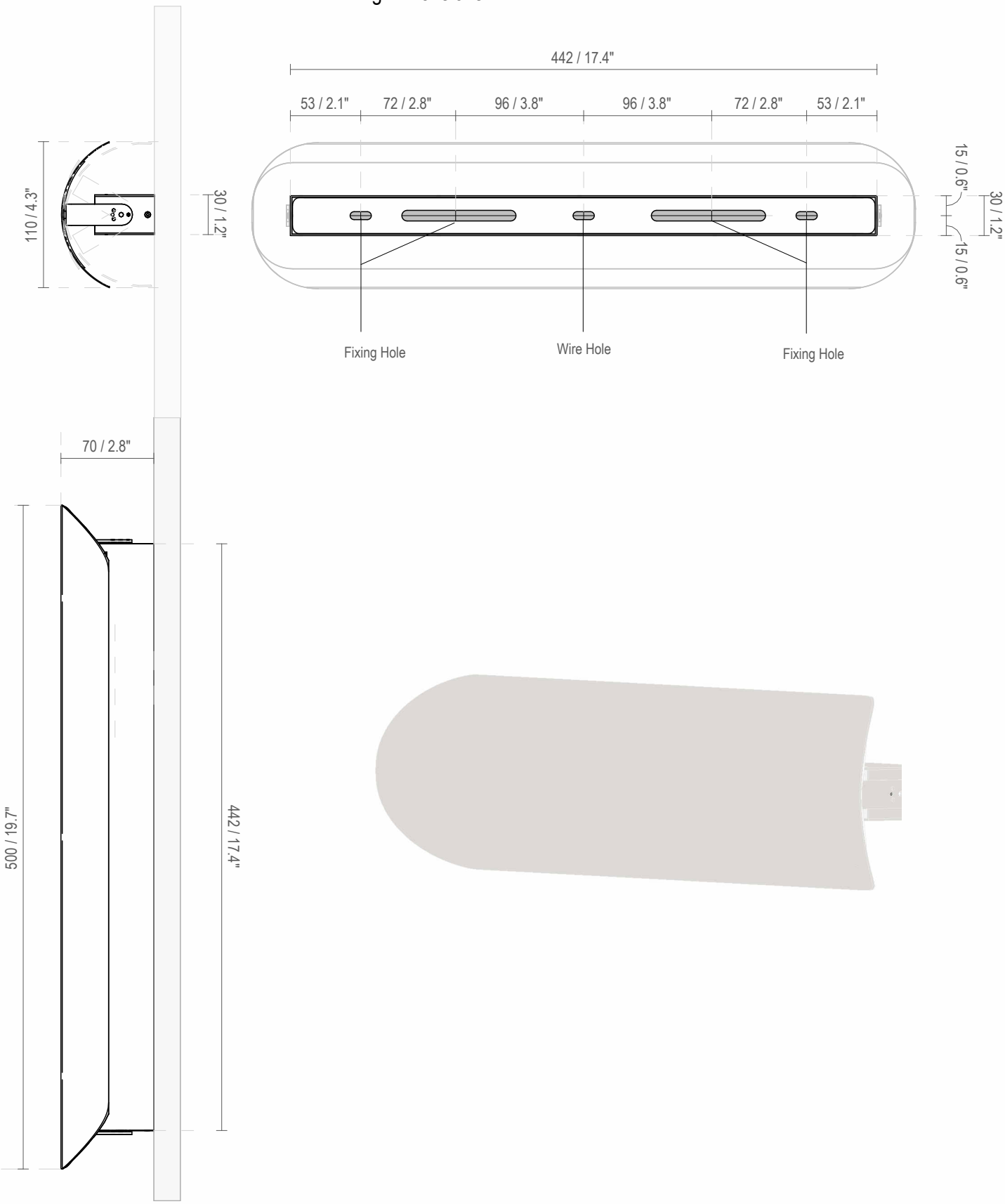

Units: mm / Inch
Actualization Date 14/10/2024