MEYJO

472-5001950s

MEYJO T TABLE LUMINAIRE made of aluminium, white, similar to RAL 9003, beam 28°, light output direct, with converter, dimmability: sensor, IP20

DRAWING

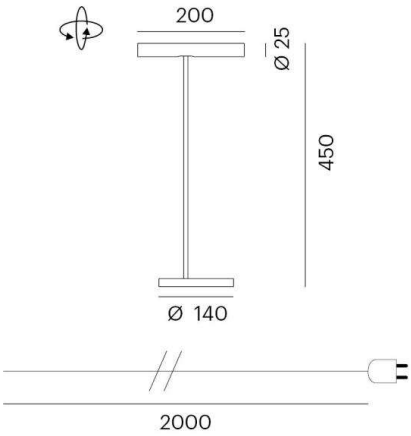

LIGHT DISTRIBUTION CURVE

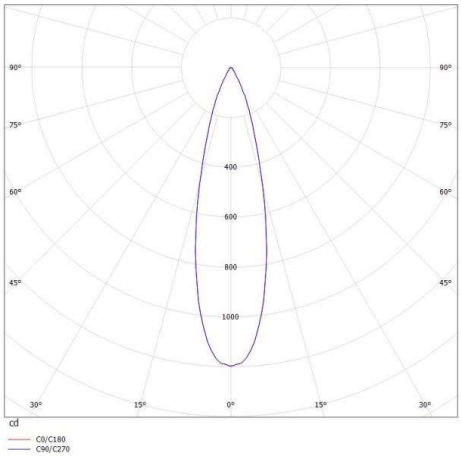

TECHNICAL DETAILS

System perform. [W]	9
Bulb type	LED
Luminous flux [lm]	350
Colour temp. [K]	3000K
CRI	>90
Converter	with converter
Dimming	sensor
Light output	direct
Beam angle [°]	28°
Voltage [V]	220-240V 50/60Hz
Material	aluminium
Length [mm]	200
Height [mm]	450
Diameter [mm]	25
IP protection class	IP20
Voltage class	protection cl. II
Net weight [kg]	6,60
Color lamp	white
RAL	9003
EAN-Number	9010506198959
Lifetime [h]	L80 B10 20 000
Energy efficiency cl.	G

CE

The values are rated values. Power and luminous flux are initially subject to a tolerance of +/- 10%. Colour temperature tolerance: +/- 150 K. The values apply to an ambient temperature of 25°C unless otherwise specified.

MEYJO

472-5001920s

MEYJO T TABLE LUMINAIRE made of aluminium, terra, beam 28°, light output direct, with converter, dimmability: sensor, IP20

DRAWING

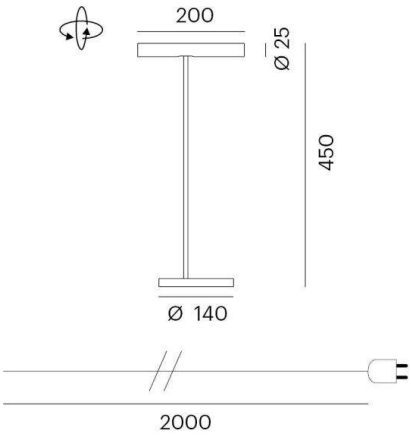

TECHNICAL DETAILS

System perform. [W]	9
Bulb type	LED
Luminous flux [lm]	350
Colour temp. [K]	3000K
CRI	>90
Converter	with converter
Dimming	sensor
Light output	direct
Beam angle [°]	28°
Voltage [V]	220-240V 50/60Hz
Material	aluminium
Length [mm]	200
Height [mm]	450
Diameter [mm]	25
IP protection class	IP20
Voltage class	protection cl. II
Net weight [kg]	6,60
Color lamp	terra
EAN-Number	9010506198942
Lifetime [h]	L80 B10 20 000
Energy efficiency cl.	G

LIGHT DISTRIBUTION CURVE

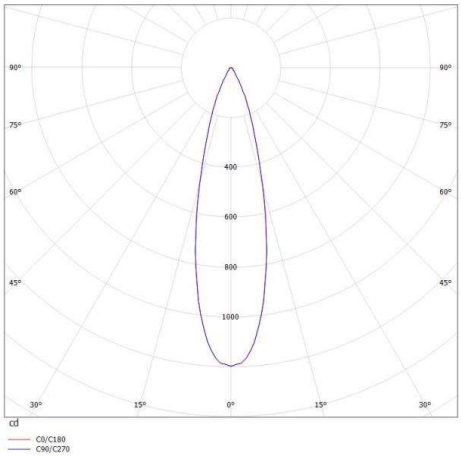

The values are rated values. Power and luminous flux are initially subject to a tolerance of +/- 10%. Colour temperature tolerance: +/- 150 K. The values apply to an ambient temperature of 25°C unless otherwise specified.

MEYJO

472-5001960s

MEYJO T TABLE LUMINAIRE made of aluminium, black, similar to RAL 9005, beam 28°, light output direct, with converter, dimmability: sensor, IP20

DRAWING

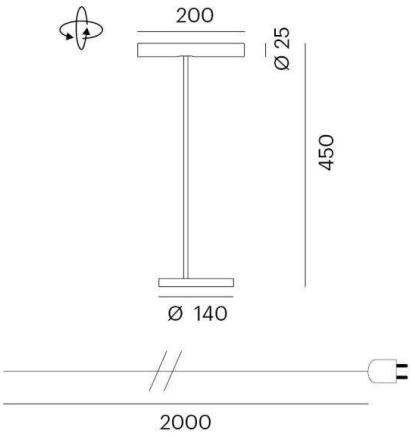

LIGHT DISTRIBUTION CURVE

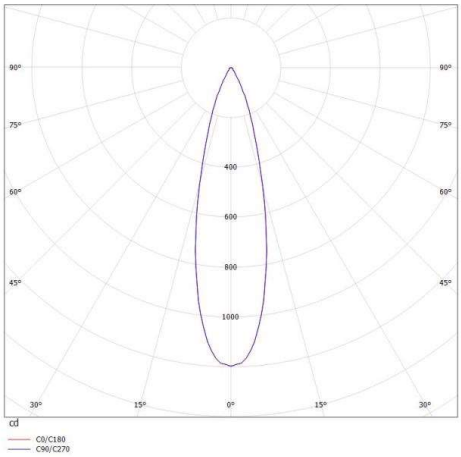

TECHNICAL DETAILS

System perform. [W]	9
Bulb type	LED
Luminous flux [lm]	350
Colour temp. [K]	3000K
CRI	>90
Converter	with converter
Dimming	sensor
Light output	direct
Beam angle [°]	28°
Voltage [V]	220-240V 50/60Hz
Material	aluminium
Length [mm]	200
Height [mm]	450
Diameter [mm]	25
IP protection class	IP20
Voltage class	protection cl. II
Net weight [kg]	6,60
Color lamp	black
RAL	9005
EAN-Number	9010506198966
Lifetime [h]	L80 B10 20 000
Energy efficiency cl.	G

CE

The values are rated values. Power and luminous flux are initially subject to a tolerance of +/- 10%. Colour temperature tolerance: +/- 150 K. The values apply to an ambient temperature of 25°C unless otherwise specified.