TECHNICAL DATA SHEET

HEXAGON R IP20

INDOOR - INTERNO - INNENBEREICH - INTERIEUR - INTÉRIEUR - INTERIOR

Fix (not adjustable) 0° - 0°

Surface mounted

Material : CALCYT® plaster

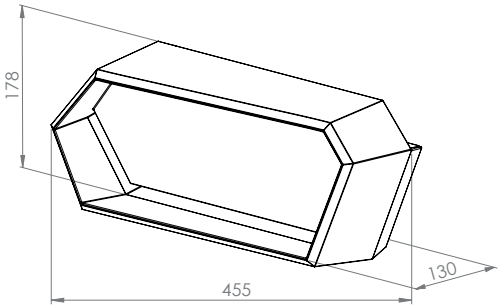

HEXAGON R LED
2 x 600LM 230VAC

REF N°	2200°K	2700°K	3000°K
phase DIM	184 71 500	184 71 000	184 71 100
DIM 1-10V	184 61 500	184 61 000	184 61 100
DIM DALI	184 31 500	184 31 000	184 31 100

230V/50Hz - 2 x 6,9W - incl. line voltage driver
- parallel wiring - 0.2m - CE - Ⓟ -
2 Step MacAdam - CRI 90 - R9=75 - A

HEXAGON R LED
2 x 800LM 230VAC

REF N°	2200°K	2700°K	3000°K
phase DIM	184 73 500	184 73 000	184 73 100
DIM 1-10V	184 63 500	184 63 000	184 63 100
DIM DALI	184 33 500	184 33 000	184 33 100

230V/50Hz - 2 x 10W - incl. line voltage driver
- parallel wiring - 0.2m - CE - Ⓟ -
2 Step MacAdam - CRI 80 - A

BRICK IN THE WALL®
invisible integration of light

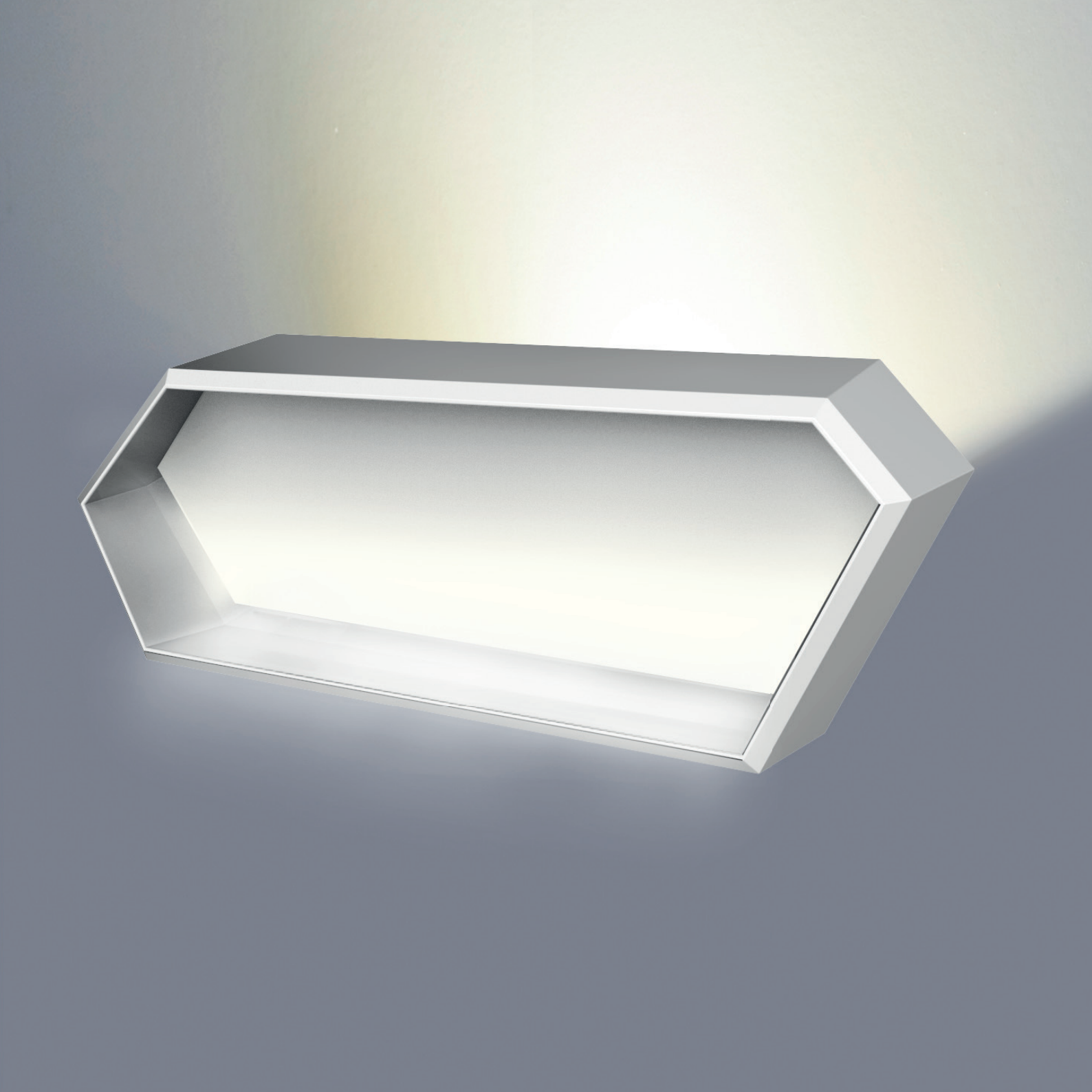

TECHNICAL DATA SHEET

HEXAGON L IP20

INDOOR - INTERNO - INNENBEREICH - INTERIEUR - INTÉRIEUR - INTERIOR

Fix (not adjustable) 0° - 0°

Surface mounted

Material : CALCYT® plaster

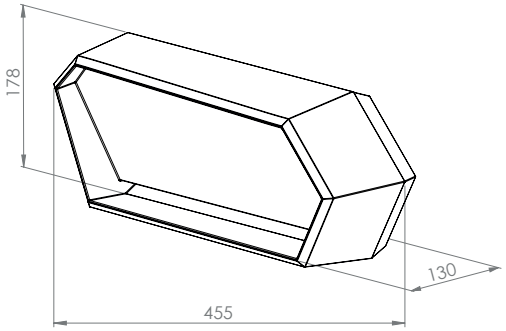

HEXAGON L LED
2 x 600LM 230VAC

REF N°	2200°K	2700°K	3000°K
phase DIM	185 71 500	185 71 000	185 71 100
DIM 1-10V	185 61 500	185 61 000	185 61 100
DIM DALI	185 31 500	185 31 000	184 31 100

230V/50Hz - 2 x 6,9W - incl. line voltage driver
- parallel wiring - 0.2m - CE - Ⓟ -
2 Step MacAdam - CRI 90 - R9=75 - A

HEXAGON L LED
2 x 800LM 230VAC

REF N°	2200°K	2700°K	3000°K
phase DIM	185 73 500	185 73 000	185 73 100
DIM 1-10V	185 63 500	185 63 000	185 63 100
DIM DALI	185 33 500	185 33 000	185 33 100

230V/50Hz - 2 x 10W - incl. line voltage driver
- parallel wiring - 0.2m - CE - Ⓟ -
2 Step MacAdam - CRI 80 - A
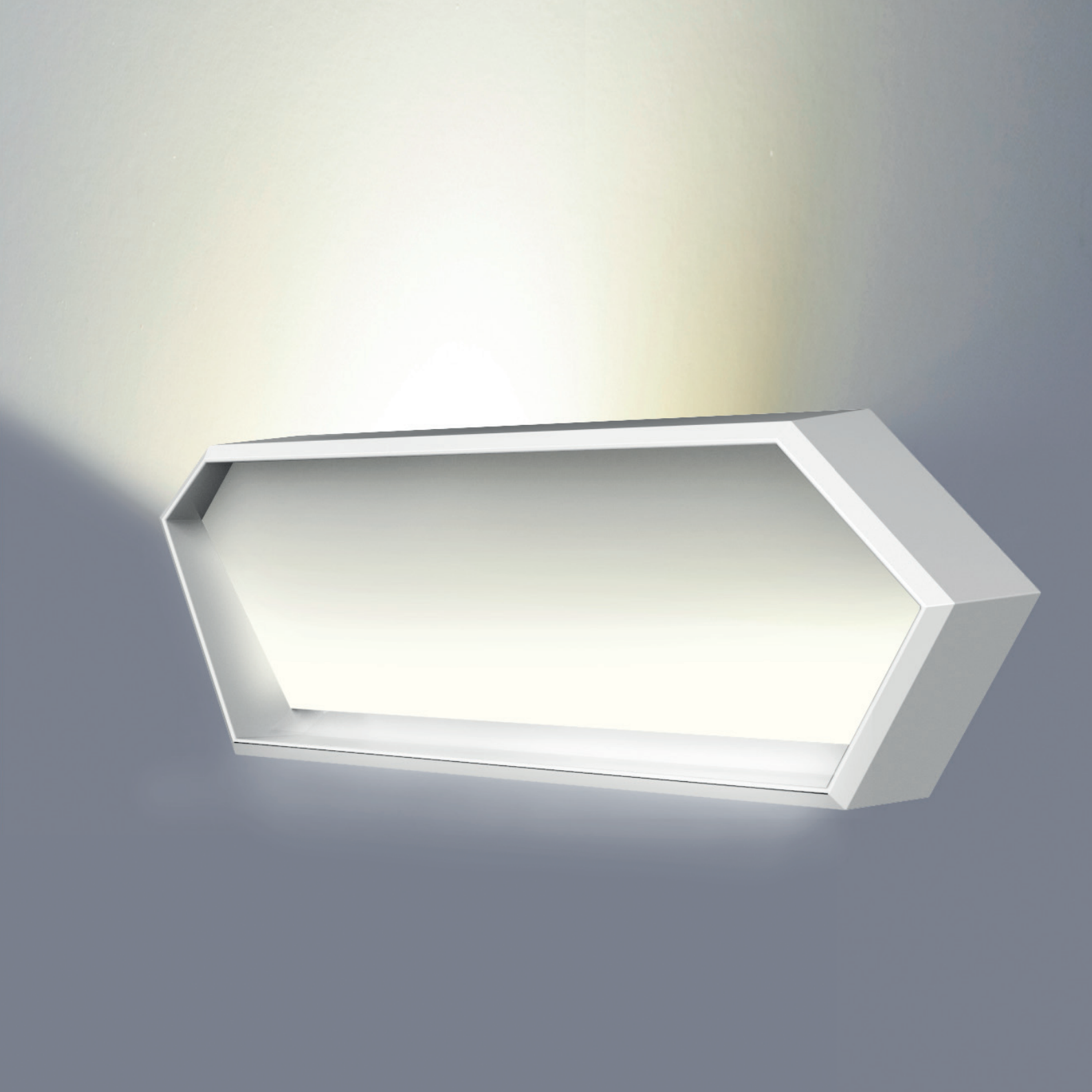
BRICK IN THE WALL®
invisible integration of light